UNIT 1: Introduction to Problem

- NAME OF PROBLEM: Smart Purse for Women

- INTRODUCTION TO PROJECT:

IoT or Internet Things refers to the network of connected physical objects that can communicate and exchange data among themselves without the need of any human intervention. It has been formally defined as an "Infrastructure of Information Society", because IoT allows us to collect information from all kind of mediums such as humans, animals, vehicles, kitchen appliances. Thus any object in the physical world which can be
provided with an IP address to enable data transmission over a network can be made part of IoT system by embedding them with electronic hardware such as sensors, software and networking gear. IoT is different than Internet as in a way it transcends Internet connectivity by enabling everyday objects that uses embedded circuits to interact and communicate with each other utilizing the current Internet infrastructure. The term IoT and its conception can be traced back to 1985 when Peter T Lewis spoke
about the concept during his speech at Federal Communications Commission (FCC).

Since then the scope of IoT has grown tremendously as currently it consists of more than 12 billion connected devices and according to the experts it will increase to 50 billion by the end of 2020. The IoT infrastructure has helped by providing real time information gathering and analysis using accurate sensors and seamless connectivity, which help in making efficient decisions. With the advent of IoT both manufacturers and consumers have benefited. Manufacturers have gained insight into how their products are used and how they perform out
in the real world and increase their revenues by providing value added services which enhances and elongates the lifecycle of their products or services. Consumers on the other hand have the ability to integrate and control more than one devices for a more customized and improved user experience.

UNIT 2: Problem Discussion

- PROBLEM DESCRIPTION:

- Today the Female sector is facing issues, when it comes to their safety as well as day-to-day necessities. Thefts have become a big issue nowadays. With the evolution of new technologies like swipeless credit/debit cards the issue of fraud transactions has increased. Women safety in local trains and public places are a noteworthy concern to be dealt with. Also no proper system is present to meet with certain types of needs of women.

- PROBLEM SOLUTION:

- The concept of IoT has been used in the following ways to deal with above mentioned problems:

1. Live Location Tracking of wallet
2. SOS Button for making sound and sending location to emergency contacts
3. RFID protected compartment for debit/credit cards
4. Biometrically secure compartment
5. Theft Detector Camera
6. Distance Alaram

UNIT 3: System Requirements

- HARDWARE COMPONENTS:

- BreadBoard
- NodeMCU-ESP8266-ESP-12E-V1.0
- SIM900 GSM Module
- ArduCAM Mini module
- Fingerprint Scanner - TTL (GT-511C3)
- Buzzer
- Push Down Switch
- Connecting Wires

- SOFTWARE SKILLS:

- Arduino C
- Google Maps API

- SOFTWARE REQUIRED:

- Arduino IDE
- BLYNK App

UNIT 4: System Analysis

- STUDY OF CURRENT/EXISTING SYSTEM

- No cost-effective purse designed for female with Sanitary Napkin Holder, In-built RFID protected Compartment, Biometrically safe compartment.
- SOS facility only available in Smart Phones.
- No mobile phone controlled purse available for female.

- REQUIRMENTS OF NEW/PROPOSED SYSTEM

- Completely IOT Based
- All requirements in one place

- FEASIBILITY: Yes

- Does the system contribute to overall objectives of the organization? : yes
- Can the system be implemented using current technologies and within the cost? : yes
- Can the system be integrated with other system which are already in the place? :yes

UNIT 5: Implementation Planning

- PROJECT BASED ON PROBLEM:

  The main objective of the project is the improve the safety of women as well as facilitate them with some of their day to day requirements by providing them with the facility of an SOS Button which generates noise when pressed and sends its location to the emergency contacts. Also the location of the wallet can also be tracked in case the wallet gets lost. Specially designed compartments for storage of swipeless cards, Money, Sanitary Napkins and important things has been provided. A connection between the purse and the mobile phones allows generating alerts and tracking location of each other.

- BLOCK DIAGRAM:

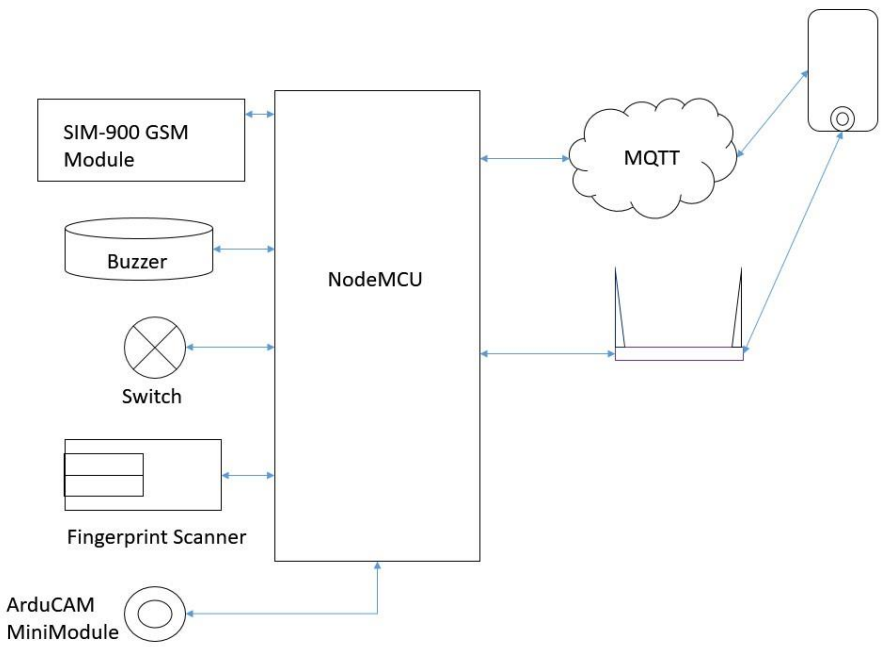

Figure 1: Block Diagram

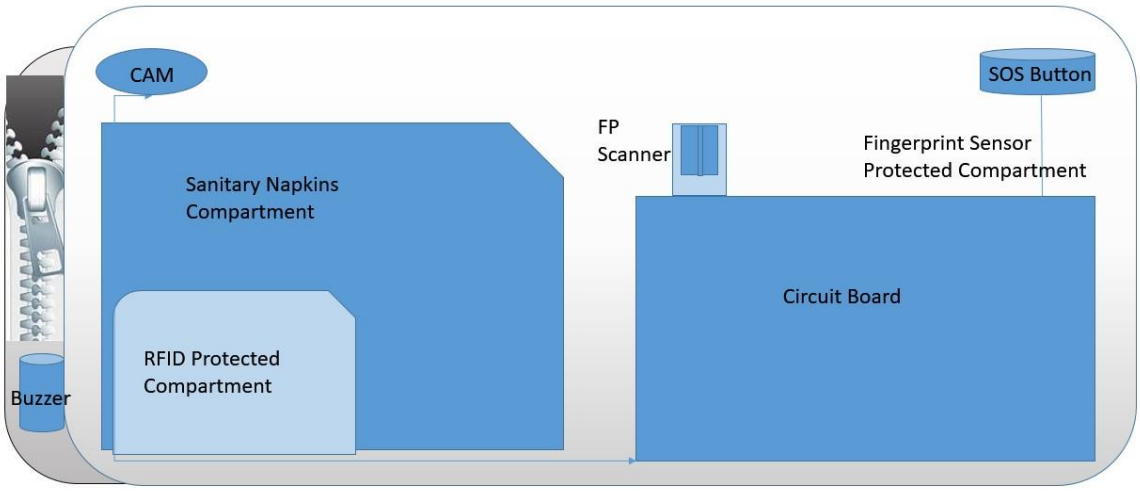

Figure 2: Smart Purse

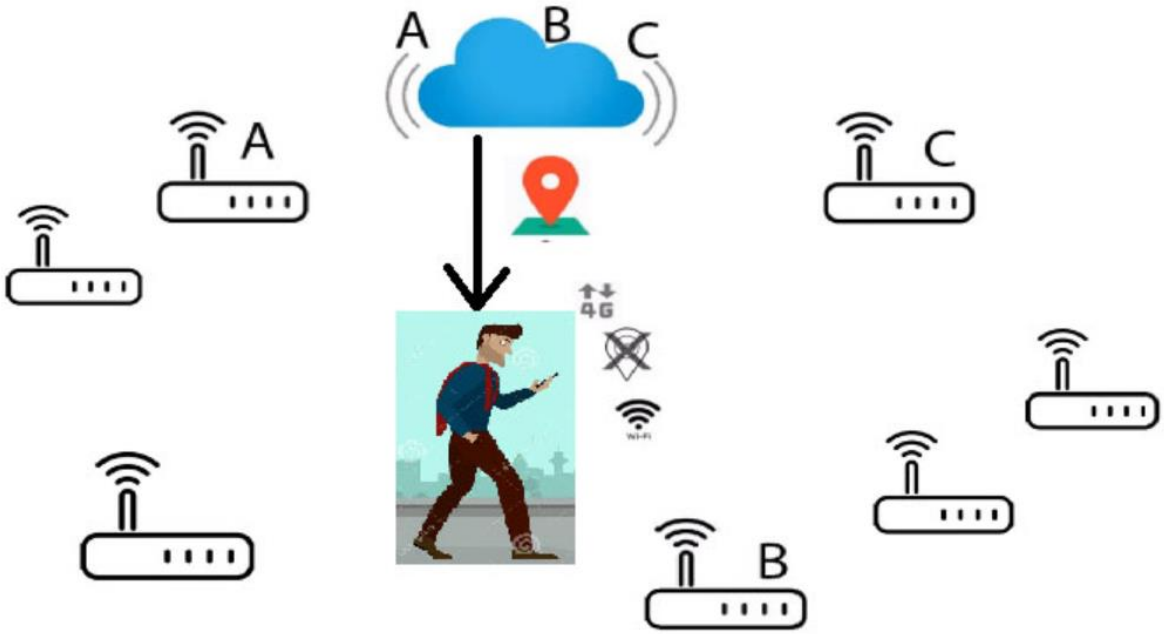

Figure 3 Location using Google Map's Geolocation API

- CIRCUIT DIAGRAM:

Interfacing of SIM-900 GSM module with NodeMCU

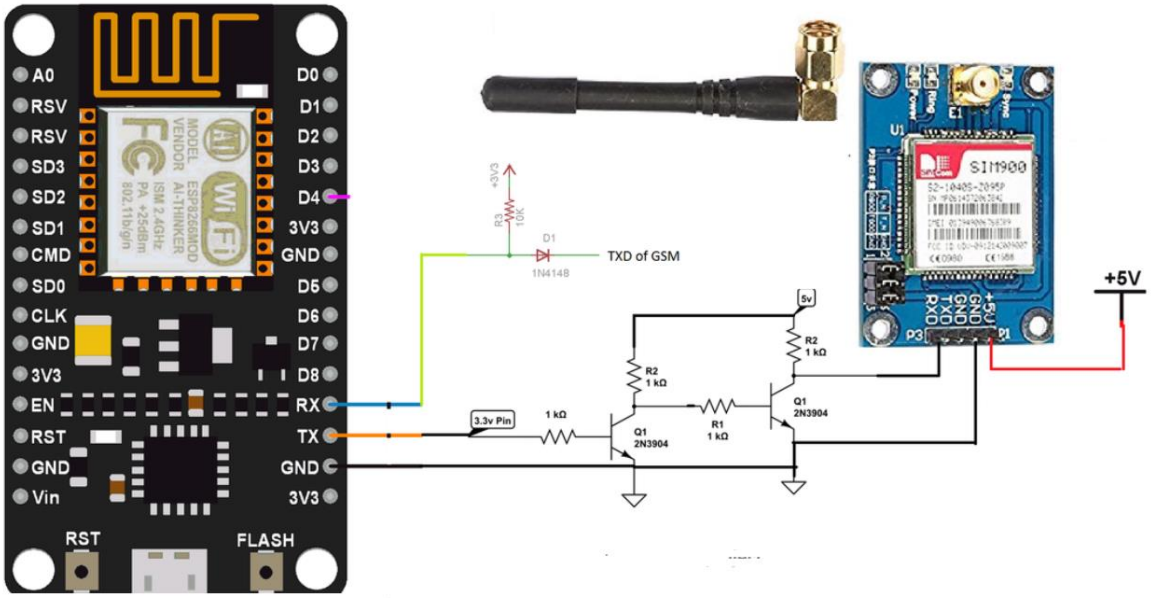

Interfacing of Buzzer, Push-Down Switch and Finger-print Scanner with NodeMCU

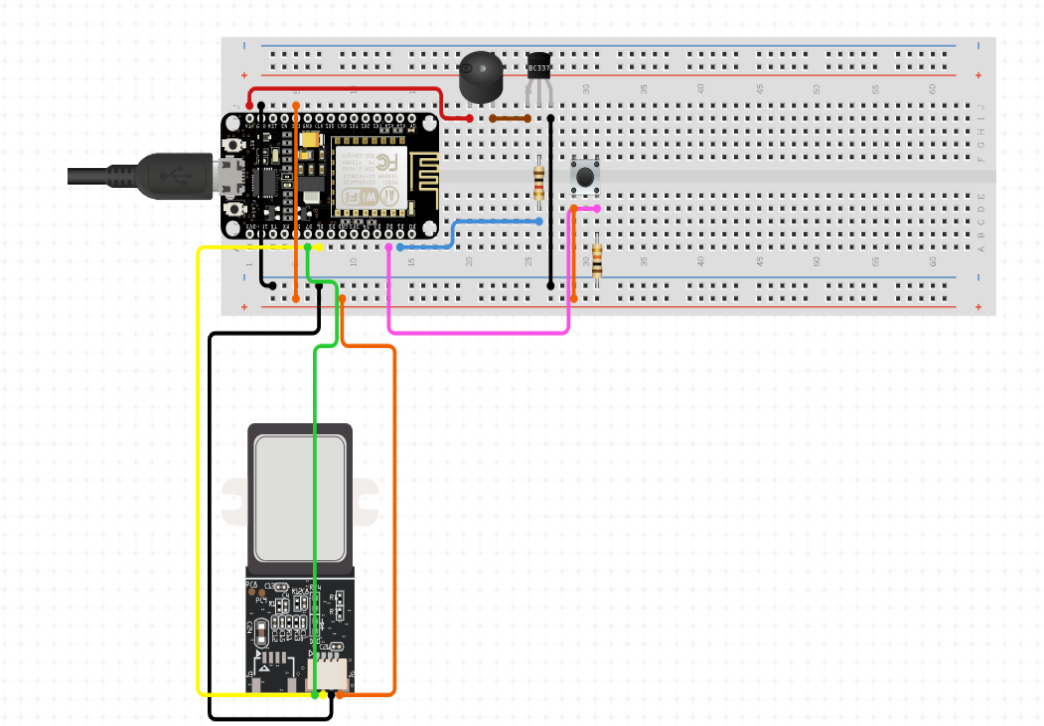

Interfacing of ArduCAM Mini module with NodeMCU

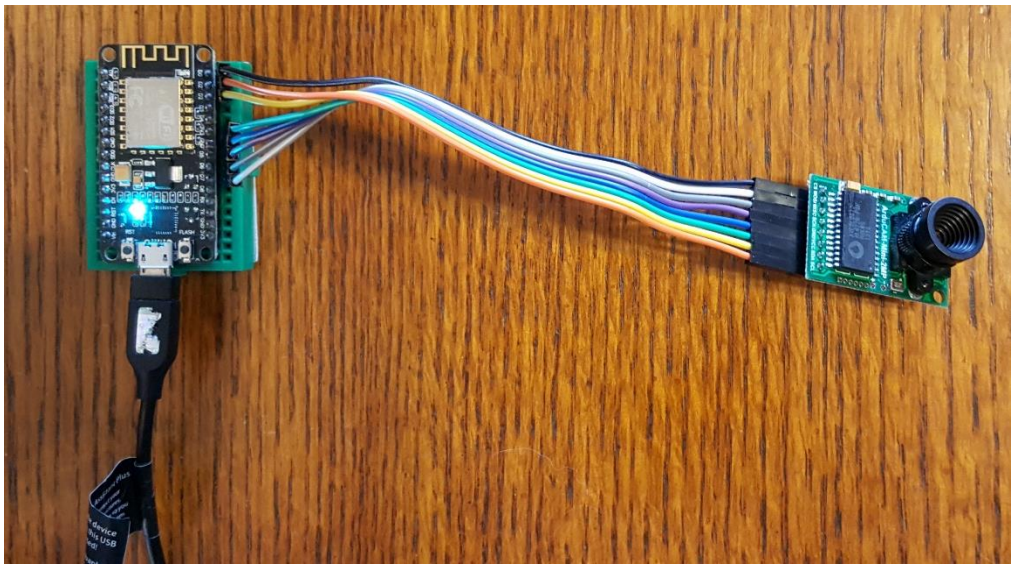

- PROJECT CODE:

```
#include <Blynk.h>
#include<ArduinoJson.h>
#include <ESP8266HTTPClient.h>
#include <ESP8266WiFi.h>
#include <ESP8266WiFi.h>
#include <BlynkSimpleEsp8266.h>

char auth[] ="cf7d768d587d446bb11f427c8cd58036";
char myssid[] = "vivo 1802";
char mypass[] = "vivo1802";

const char* Host = "www.googleapis.com";
String thisPage = "/geolocation/v1/geolocate?key=";
int status = WL_IDLE_STATUS;

String jsonString = "{\n";
double latitude    = 0.0;
double longitude   = 0.0;
double accuracy    = 0.0;
int more_text = 1;
 WidgetMap myMap(V0);
```

```
BlynkTimer timer;
float lat,lon,alt,spe;
 BLYNK_WRITE(V1)
  {
    lat=param[0].asFloat();
    lon=param[1].asFloat();
    alt=param[2].asFloat();
    spe=param[3].asFloat();
  }
void setup()
{
  Serial.begin(9600);
  Blynk.begin(auth, myssid, mypass);

Serial.println("Start");
  WiFi.mode(WIFI_STA);
  WiFi.disconnect();
  delay(100);
Serial.println("Setup done");
  WiFi.begin(myssid, mypass);

  while (WiFi.status() !=WL_CONNECTED)
  {
    delay(500);
    Serial.print(".");
  }

  char bssid[6];
  DynamicJsonBuffer jsonBuffer;

  Serial.println("scan start");
  int n = WiFi.scanNetworks();
  Serial.println("scandone");

  if (n == 0)
    Serial.println("no networks found");
  else
  {
    Serial.print(n);
    Serial.println(" networksfound...");
    if (more_text)
    {
      Serial.println("{");
      Serial.println("\"homeMobileCountryCode\":234,");
```

```
    Serial.println("\"homeMobileNetworkCode\":27,");
    Serial.println("\"radioType\":\"gsm\",");
    Serial.println("\"carrier\":\"Vodafone\",");
    Serial.println("\"cellTowers\": [");
    Serial.println("],");
    Serial.println("\"wifiAccessPoints\": [");

    for (int i = 0; i < n;++i)
    {
      Serial.println("{");
      Serial.print("\"macAddress\" : \"");
      Serial.print(WiFi.BSSIDstr(i));
      Serial.println("\",");
      Serial.print("\"signalStrength\": ");
      Serial.println(WiFi.RSSI(i));

      if (i < n - 1)
      {
        Serial.println("},");
      }
      else
      {
        Serial.println("}");
      }
    }
  Serial.println("]");
  Serial.println("}");
  }
  Serial.println(" ");

}
jsonString = "{\n";
jsonString +="\"homeMobileCountryCode\": 234,\n";
jsonString +="\"homeMobileNetworkCode\": 27,\n";
jsonString +="\"radioType\": \"gsm\",\n";
jsonString +="\"carrier\": \"Vodafone\",\n";
jsonString +="\"wifiAccessPoints\": [\n";

for (int j = 0; j < n; ++j)
{
  jsonString += "{\n";
  jsonString +="\"macAddress\" : \"";
  jsonString +=(WiFi.BSSIDstr(j));
  jsonString +="\",\n";
```

```
    jsonString +="\"signalStrength\": ";
    jsonString += WiFi.RSSI(j);
    jsonString += "\n";
    if (j < n - 1)
    {
      jsonString +="},\n";
    }
    else
    {
      jsonString +="}\n";
    }
  }

  jsonString += ("]\n");
  jsonString += ("}\n");

  Serial.println("");

  WiFiClientSecure client;
  client.setInsecure();

  if (client.connect(Host,443))
  {
    Serial.println("Connected");
    client.println("POST " + thisPage +
"AIzaSyBP3Gg3C2wbZSgeBjAMzFV7S9jFNqhVDzA" + " HTTP/1.1");
    client.println("Host: " + (String)Host);
    client.println("User-Agent: NodeMCU (ESP32)");
    client.println("Content-Type: application/json");
    client.println("Connection: Keep-Alive");
    client.print("Content-Length: ");
    client.println(jsonString.length());
    client.println();
    client.print(jsonString);
    delay(500);
  }

  while (client.available())
  {
    String line =client.readStringUntil('\r');
    if (more_text)
    {
      Serial.print(line);
    }
```

```
    JsonObject& root =jsonBuffer.parseObject(line);
    if (root.success())
    {
      latitude    =root["location"]["lat"];
      longitude   =root["location"]["lng"];
      accuracy   = root["accuracy"];
    }
  }

  Serial.println("closing connection");
  Serial.println();
  client.stop();
  Serial.print("Latitude =");
  Serial.println(latitude, 6);
  Serial.print("Longitude =");
  Serial.println(longitude, 6);
  Serial.print("Accuracy =");
  Serial.println(accuracy);


  delay(10000);



  Serial.println("blynk stop");
  timer.setInterval(5000L,loc);
  pinMode(D8,INPUT);
  attachInterrupt(D8,mail,RISING);
  pinMode(D6,INPUT);
  attachInterrupt(D6,celllocate,RISING);
}

void mail()
{
  String mails="my location is latitude:"+(String)latitude+"
longitude:"+(String)longitude+".";
  Blynk.email("Subject: SOS",mails);
  Serial.println("mail");
}
void celllocate()
{


   String mails="location of phone is latitude:"+(String)lat+" longitude:"+(String)lon+".";
```

```
  Blynk.email("Subject: lost phone",mails);
  Serial.println("mail phone");
}
void loc()
{
   myMap.location(1, latitude, longitude, "value");
}

void loop()
{


  Blynk.run();

}
```

- Hardware and Software related to Project:

1. BreadBoard
2. NodeMCU-ESP8266-ESP-12E-V1.0
3. SIM900 GSM Module
4. ArduCAM Mini module OV260
5. Fingerprint Scanner - TTL (GT-511C3)
6. Buzzer
7. Push Down Switch
8. Arduino C
9. Google Maps API

UNIT 6: Working Model/Prototype

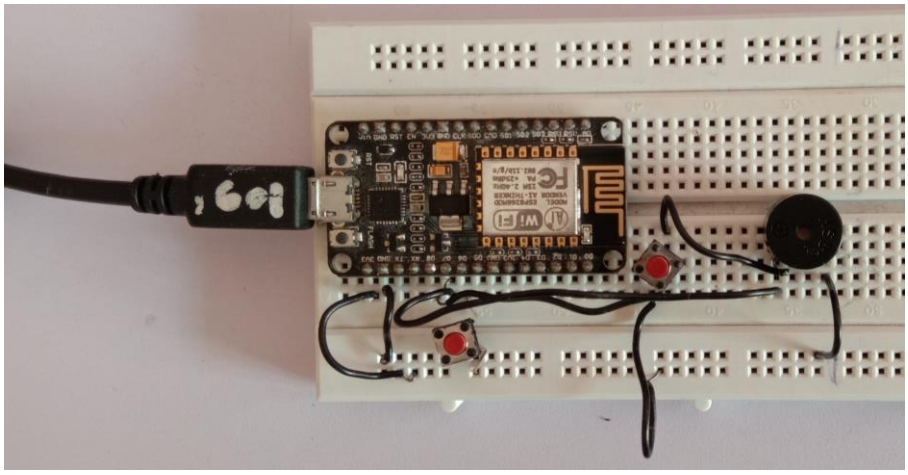

Figure 4: prototype Circuit

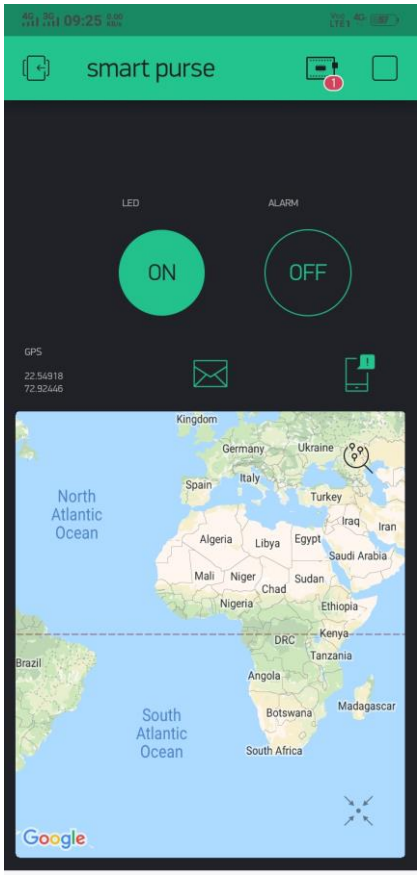

Figure 5: BLYNK App

UNIT 7: Major Component Description

- NodeMCU-ESP8266-ESP-12E-V1.0

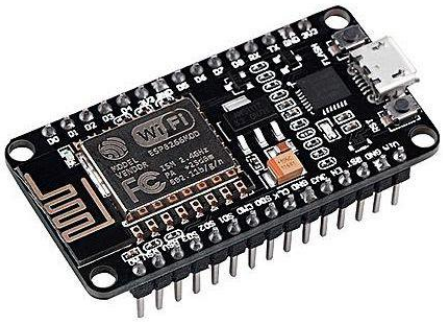

Figure 1: NodeMCU ESP8266 ESP-12E-V1.0

NodeMCU is an open source IoT platform. It includes firmware which runs on the ESP8266 Wi-Fi SoC from Espressif Systems, and hardware which is based on the ESP-12 module. The term “NodeMCU” by default refers to the firmware rather than the DevKit. The firmware uses the Lua scripting language. It is based on the eLua project, and built on the Espressif Non-OS SDK for ESP8266. It uses many open source projects, such as lua-cjson, and spiffs.

Specifications:

- Version :NodeMCU v1.0 12E
- Breadboard Friendly Light Weight and small size.
-3.3V operated, can be USB powered.
-Uses wireless protocol 802.11b/g/n.
-Built-in wireless connectivity capabilities.
-Built-in PCB antenna on the ESP-12E chip.
-Capable of PWM, I2C, SPI, UART, 1-wire, 1 analog pin.
-Uses CP2102 USB Serial Communication interface module.
-Arduino IDE compatible (extension board manager required).
-Supports Lua (alike node.js) and Arduino C programming language.

Pin Diagram:

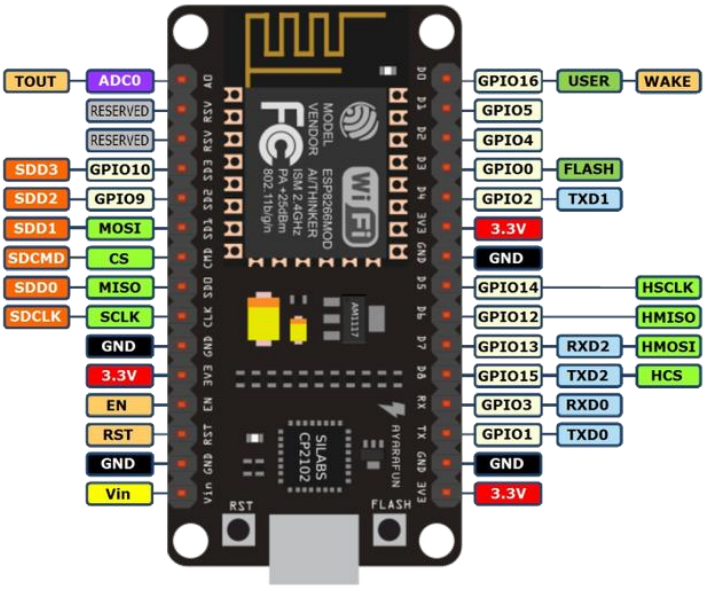

Figure 2 NodeMCU Pin Diagram

Specifications of ESP-12E WiFi Module :

Wireless-Standard	IEEE 802.11 b/g/n
Frequency Range	2.412 - 2.484 GHz
Wireless Form	On-board PCB Antenna
Electrical Characteristic	3.3 V Operated 15 mA output current per GPIO pin 12 - 200 mA working current
Operating Temperature	-40 to +125 ºC
Serial Transmission	110 - 921600 bps, TCP Client 5
Network Protocol	IPv4, TCP / UDP / FTP / HTTP

- SIM900 GSM Module

Figure3: SIM 900 GSM Module

The SIM900 is a complete Quad-band GSM/GPRS solution in a SMT module which can be embedded in the customer applications. Featuring an industry-standard interface, the SIM900 delivers GSM/GPRS 850/900/1800/1900MHz performance for voice, SMS, Data, and Fax in a small form factor and with low power consumption. With a tiny configuration of 24mm x 24mm x 3 mm, SIM900 can fit almost all the space requirements in your M2M application, especially for slim and compact demand of design.

Features:

- SIM900 is designed with a very powerful single-chip processor integrating AMR926EJ-S core
- Quad - band GSM/GPRS module with a size of 24mmx24mmx3mm
- SMT type suit for customer application
- An embedded Powerful TCP/IP protocol stack
- Based upon mature and field-proven platform, backed up by our support service, from definition to design and production

SIM900 General Specification:

- Quad-Band 850/ 900/ 1800/ 1900 MHz
- GPRS multi-slot class 10/8
- GPRS mobile station class B
- Compliant to GSM phase 2/2+
  - Class 4 (2 W @ 900 MHz)
  - Class 1 (1 W @ 1800MHz)
- Dimensions: 24x24x3mm
- Weight: 3.4g
- Control via AT commands (GSM 07.07 ,07.05 and SIMCOM enhanced AT Commands)
- SIM application toolkit
- Supply voltage range : 3.4V to 4.5V
- Low power consumption: 1.0mA(sleep mode)
- Operation temperature: -40°C to +85 °C

- ArduCAM Mini module OV260

- Description

Module with camera 2 MPx with a resolution of 1600 px x 1200 and speeds up to 60 frames per second. Extends the capabilities of the system, for example, mikrokontrolrów Arduino, STM32 and mini-computer Raspberry Pi about the possibility of taking photos and recording video clips. The device operates with a voltage of 3.3 V and 5 V, communicates via SPI, has a sensitivity of 0.6 V/(lux*sec), the angle of view of 25 °, the lens is 1/4".

- Modes of operation

- Single Capture Mode (single steal) - the default mode of the device after the exit command via SPI, the camera captures a frame and adds it to the buffer, while setting a flag in the registry. The user checks the state of the flag knows that the read has been completed.
- Multiple Capture Mode (multiple is fine) - an advanced mode where the user specifies the number of frames to be intercepted. Please note that the number of frames cannot exceed the capacity of the buffer.
- JPEG Compression (JPG compression) - in this mode, the output compressed data in the JPG format with higher resolution, than RGB.
- Normal Read and Burst Read Operation - in this mode, it is sufficient to send a read command for receiving the continuous transmission of frames via an SPI interface.
- Rewind the Read Operation allows to read several times the same data contained in the buffer.
- Low Power Mode (low current) - disables sensor and transducer in order to save energy.
- Image Sensor Control (sensor setting) - mode change parameters of the camera sensor, including balance, brightness, contrast and saturation.

- Specification

- Working voltage: 3.3 V / 5 V
- Resolution: 1600 x 1200 Pixels (2 Megapixels)
- The number of frames per second:
  up to 60 FRAMES per second for CIF format
  up to 30 FRAMES per second for SVGA format
  up to 15 FRAMES per second for the format SXGA / UXGA

- Lens size: 1/4 "
- Angle: 25 °
- compressed data 8-bit
- Module dimensions: 35 × 25 mm

- Fingerprint Scanner - TTL (GT-511C3)

The fingerprint module from ADH-Tech communicates over TTL Serial. The module itself does all of the heavy lifting behind reading and identifying the fingerprints with an on-board optical sensor and 32-bit CPU. All you need to do is send it simple commands. To get started, just register each fingerprint that you want to store by sending the corresponding command and pressing your finger against the reader three times. The fingerprint scanner can store different fingerprints and the database of prints can even be downloaded from the unit and distributed to other modules. As well as the fingerprint "template," the analyzed version of the print, you can also retrieve the image of a fingerprint and even pull raw images from the optical sensor! This is the more economical version of the GT-511 which has a decreased memory capacity (compared to the GT-511C3). The module can only store up to 20 different fingerprints but is capable of 360 fingerprint recognition and download and upload templates using serial interface. The module is small and easy to mount using two mounting tabs on the side of the sensor. The on-board JST-SH connector has four signals: Vcc, GND, Tx, Rx.

UNIT 8: Applications and Conclusion

- Applications:
- Wallet for women

- Future Scope:
- Built-in PowerBank
- Global Wifi Hotspot
- Embedded SD Card

- Conclusion:
- It can be concluded that this project (Smart Purse for Women) can be implemented in real life for improving the safety of women and for handling some of their day-to-day necessities.
- The Smart Purse designed by us is an innovative solution to all the requirements gathered in one place.

UNIT 9: Stakeholders

- Stakeholders

- Female Accessories Manufacturers